Student Name					
Teacher	AHU	COZ	GSL	HAL	MDI

CHEMISTRY

Unit 3, SAC 1: Redox reactions, Galvanic cells and Fuel cells

A comparison of two electricity-generating cells

Chapters 4-6 of Heinemann Chemistry 2

Monday 22nd of February, Period 4

Reading time: 5 minutes
Writing time: 40 minutes

Structure of SAC

Number of questions	Number of questions to be answered	Total number of marks
4	4	31

- Students are permitted to bring into the assessment room: pens, pencils, highlighters, erasers, sharpeners, rulers and one scientific calculator.
- Students are not permitted to bring into the examination room: blank sheets of paper and/or white out liquid/tape.

Materials supplied

- This question and answer book of **6 pages**.
- A data book

Instructions

- Write your name in the space provided above on this page.
- All responses must be written in English.
- Working out must be shown for all calculations
- Do NOT write on the data book

At the end of the assessment session

- Wait silently for the supervisor to collect your **question and answer booklet and data book.**

Students are NOT permitted to bring mobile phones and/or any other unauthorised electronic devices into the examination room.

Students must not disclose the contents of the task; to do so will be a breach of VCE guidelines and will be dealt with according to VCAA regulations.

Instructions

Answer **all** questions in the spaces provided. Write using black or blue pen.
To obtain full marks for your responses you should:

- Give simplified answers with an appropriate number of significant figures to all numerical questions; un-simplified answers will not be given full marks.
- Show all working in your answers to numerical questions. No marks will be given for an incorrect answer unless it is accompanied by details of the working.
- Make sure chemical equations are balanced and that the formulas for individual substances include an indication of state; for example, $H_2(g)$; NaCl(s)

Introduction: Secondary cell or fuel cell?

Most car manufacturers are working to reduce emissions, but they are not in agreement on how to do that. Some prefer using secondary cells while others champion hydrogen fuel cells as the superior zero-emission technology.

Conventional electric vehicles are powered by a secondary cell which stores charge in a similar way to mobile phones. They need recharging after every 160-500 km. With a standard charging point, it can take up to 12 hours to fully charge a battery.

On the other hand, hydrogen fuel cell cars have batteries onboard which store hydrogen rather than petrol or diesel fuel. These cars need refuelling, and for each fill of hydrogen they can travel between 320-405 km.

Electric cars powered by Secondary Cells

Electric car maker Tesla plans to introduce a new low-cost, long-life battery in its Model 3 sedan in China this year. The new, low-cost battery designed to last 1.6 million kilometers, uses lithium-iron phosphate ($LiFePO_3$) as the cathode and a graphite electrode with a metallic backing as the anode.

Question 1 (9 marks)

In a lithium-iron phosphate ($LiFePO_3$) cell, lithium ions, Li^+, move between the electrodes as the cell is discharged and charged. A simplified description of the reactions that occur at the electrodes as the cell is **discharged** is:

Cathode: $FePO_4 + Li^+ + e^- \rightarrow LiFePO_4$

Anode: $LiC_6 \rightarrow Li^+ + C_6 + e^-$

a. Write the full equation for the reaction that occurs in the lithium-iron phosphate cell when it is **recharged**. 1 mark

_____

_____

b. Identify one design feature of the lithium-iron phosphate cell that enables it to be recharged. 1 mark

_____

_____

c. On the diagram below, indicate the following as the cell is **discharged**:

i. the polarity of the electrodes (using **+** and **–** inside the circles A and B) 1 mark

ii. the direction of movement of the lithium ions, Li^+ (using an arrow within the box) 1 mark

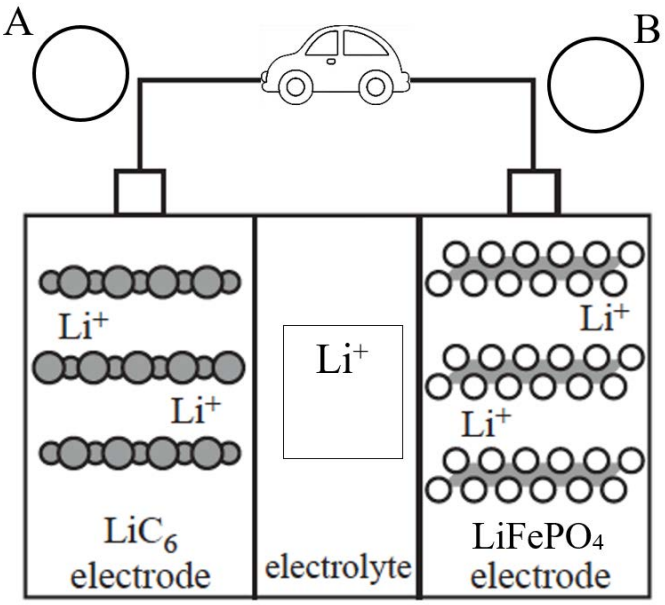

d. By referring to the diagram above, explain the function of the electrolyte. 1 mark

_____

_____

_____

_____

e. The lithium-iron phosphate cell has a maximum theoretical cell voltage of 3.25 V under standard conditions. The cell must be recharged by connecting it to an external power supply. Complete the table below to show the voltage and connections (**positive** or **negative** terminals of the external power supply) required for recharging the cell.

2 marks

Power supply voltage:	_____ volts
LiC_6 electrode connected to:	_____ terminal of the external power supply.

f. A car containing a lithium-iron phosphate battery is washed with a cleaning solution containing sodium hydroxide, NaOH (aq). Write a balanced chemical equation to show the spontaneous reaction that will occur if the cleaning solution came in contact with the lithium metal in the battery. 2 marks

_____

_____

_____

_____

Electric cars powered by Fuel Cells

Fuel cells are the most energy efficient devices for extracting power from fuels. Capable of running on a variety of fuels, including hydrogen, natural gas, and biogas, fuel cells can provide clean power. When using hydrogen produced from natural gas, fuel cell vehicles are expected to have well-to-wheels greenhouse gas emissions less than half that of current gasoline-powered vehicles.

People who advocate for fuel-cell cars have pointed out advantages, including quick refuelling times of just a few minutes and long range. One example of such cell is the phosphoric acid fuel cell (PAFC). The electrolyte is concentrated phosphoric acid and the reactants are hydrogen and oxygen gas.

Question 2 (11 marks)

A simplified diagram of a phosphoric acid fuel cell is shown below:

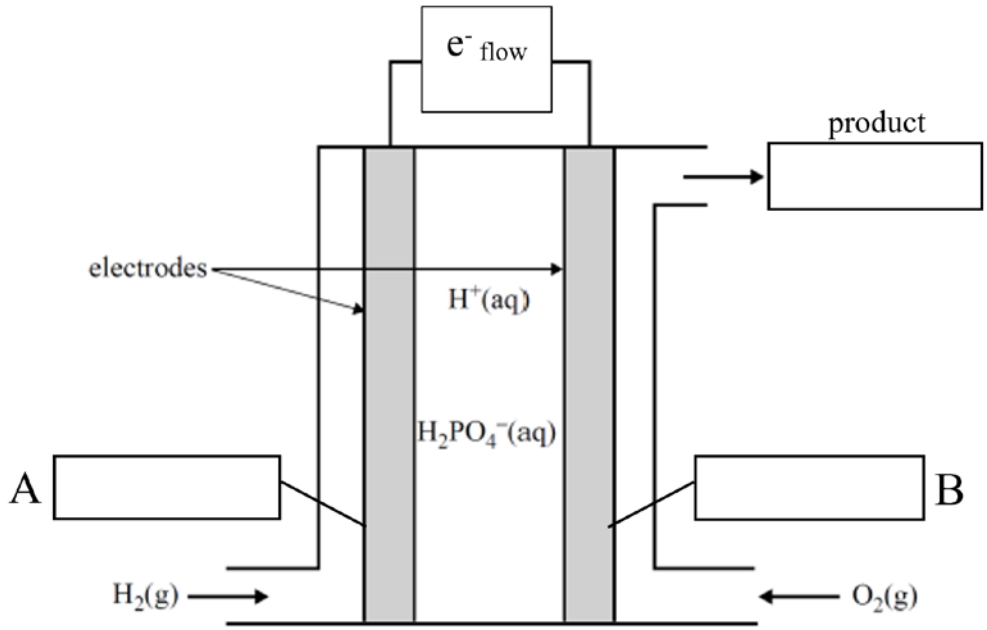

a. On the diagram above label the following as the cell is operational:

i. the direction of movement of electrons, e- (using an arrow) 1 mark

ii. the product of the reaction 1 mark

iii. the Cathode and the Anode (boxes A and B). 1 mark

b. Write two half-equations and the final overall reaction that takes place in this cell. 3 marks

Oxidation:

Reduction:

Overall:

c. What is the maximum voltage expected for this fuel cell under standard conditions? 1 mark

g. Under real-life conditions, the output of the phosphoric acid fuel cell (PAFC) is approximately 0.25 V lower than the predicted theoretical value under standard conditions. Identify one specific reason for this discrepancy. 1 mark

d. The nature of the electrodes is essential to the effective operation of the hydrogen fuel cell. Usually, fuel cells have electrodes that are porous and contain platinum metal as a catalyst. Explain the purpose of the porous electrodes. 1 mark

e. Hydrogen is a highly flammable chemical. If a leak occurs, a spark will most likely result in an explosion rather than a flame. The reaction during a hydrogen explosion can be written as:

$$2\ H_2(g) + O_2(g) \rightarrow 2H_2O\ (g)$$

Compare the energy transformations that occur in an explosion to the ones that occur inside a fuel cell. 2 marks

Question 3 (5 marks)

Given the safety concerns associated with the storage of hydrogen in cars, car manufacturers are also developing fuel cells that run on ethanol. Ethanol is oxidised to ethanoic acid at one electrode and oxygen from the air is converted to water at the other. A basic electrolyte is used.

The overall equation for this reaction is:

$$CH_3CH_2OH\ (l) + O_2\ (g) \rightarrow CH_3COOH\ (l) + H_2O\ (l)$$

a. Identify the oxidising agent. Justify your answer using oxidation numbers. 2 marks

b. Write a balanced half-equation for the reaction that occurs at the anode. 2 marks

c. Give a reason why ethanol is a safer alternative to hydrogen in fuel-cell powered vehicles. 1 mark

_____

_____

_____

_____

Question 4 (6 marks)

Based on your understanding of the lithium-iron phosphate ($LiFePO_3$) cell and the phosphoric acid fuel cell (PAFC) complete the table below to compare the two electricity-generating cells based on their properties and design features.

Properties/Features **unique** to the lithium-iron phosphate ($LiFePO_3$) cell (see Q1 page 2)	1)
	2)
Properties/Features **unique** to the phosphoric acid fuel cell (PAFC) (see Q2 page 4)	1)
	2)
Properties/Features **common** to both types of cells	1)
	2)

6 marks

END OF TEST